SMD CONTACT SPRINGS
FCB-11SX2030036B-YY-SMD

SMD contact springs are ideal for automatic assembly on printed circuit boards. They are soldered by the standard-reflow-soldering process.

The standard basic material used for SMD contact springs is copper beryllium (CuBe). However, other materials can also be supplied.

As standard, SMD springs are gold-plated (AU). They can be supplied in a wide range of dimensions and shapes.

- **Ideal for automatic assembly**
- **Standard basíc material: CuBe**
- **Standard plating: AU**
- **Available in different dimensions and types**
- **Almost unlimited working life**

RoHS ✓ REACH ✓ REEL

PRODUCT SPECIFICATIONS

PROPERTY		VALUE / TOLERANCE
Thickness		0,1 mm
Width		2,0 mm ± 0,2
Length		3,0 mm ± 0,2
Height		3,6 mm ± 0,2
Basic material		Copper beryllium (CuBe)
Plating	Barrier layer NI Outer layer AU	1µm – 2µm 0,025µm – 0,075µm

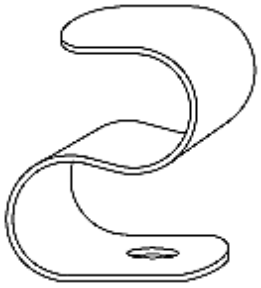

DIMENSIONS (mm)

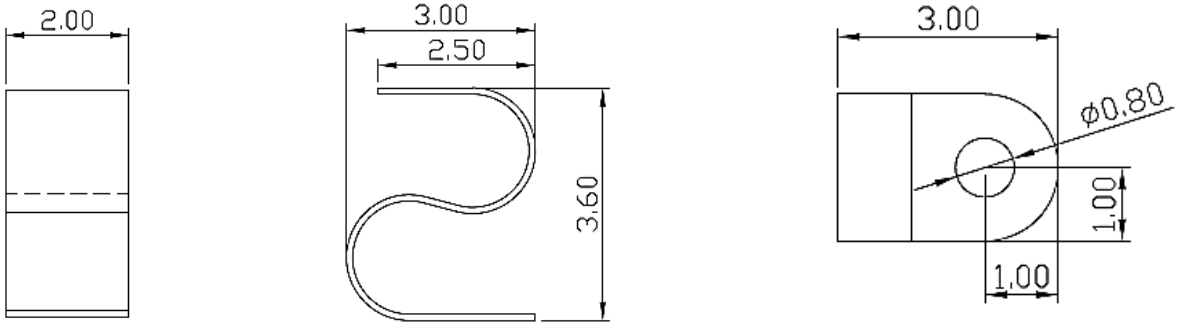

RECOMMENDED RESERVED AREA ON THE PCB (mm)

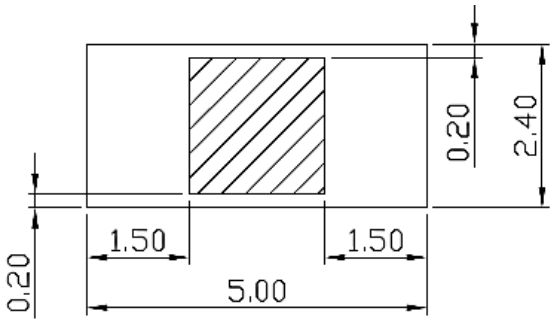

RECOMMENDED PAD FOR THE PCB (mm)

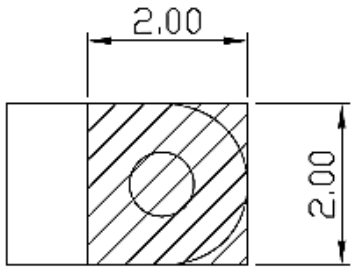

DISCLAIMER

This is only a recommendation based on information available to mtc at the time of printing. Actual land pattern can be significantly different due to various materials and processes used in PCB assembly. mtc makes no representation or warranty of performance based on the recommended land pattern.

BUILDING AN ITEM NUMBER

FCB-11SX2030036B-YY-SMD

- Contact Spring
- Type number
- Dimensions
- Copper beryllium
- SMD type

G/AU	Gold-plated
S/SN	Tin-plated
A/AG	Silver-plated

Standard options

FORCE DEFLECTION DIAGRAM*

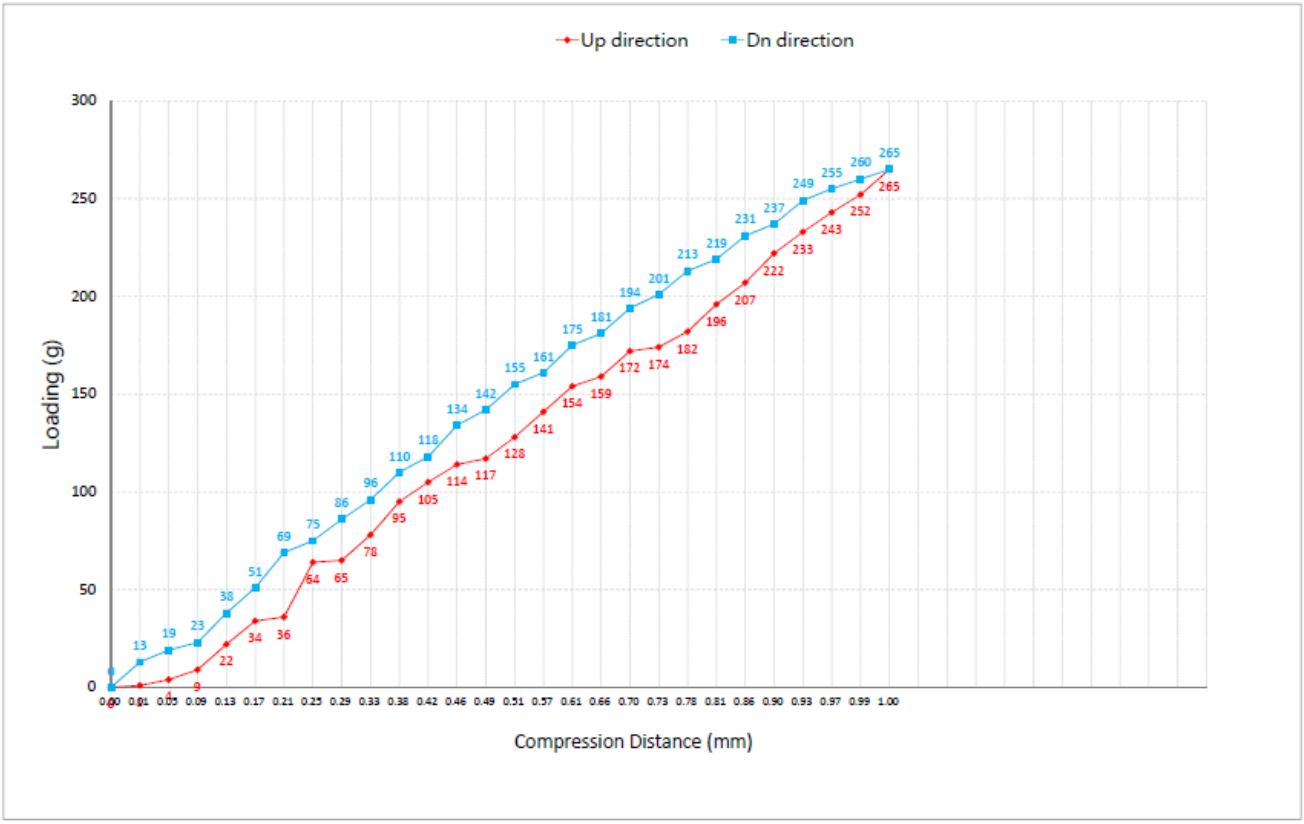

Total Compression Distance(mm)	1.00	
Displacement (mm)	Loading force(g) Down direction	Loading force(g) UP direction
0	0	0
0.01	13	1
0.05	19	4
0.09	23	9
0.13	38	22
0.17	51	34
0.21	69	36
0.25	75	64
0.29	86	65
0.33	96	78
0.38	110	95
0.42	118	105
0.46	134	114
0.49	142	117
0.51	155	128
0.57	161	141
0.61	175	154
0.66	181	159
0.70	194	172
0.73	201	174
0.78	213	182
0.81	219	196
0.86	231	207
0.90	237	222
0.93	249	233
0.97	255	243
0.99	260	252
1.00	265	265

NOTE * Only valid for gold-plated version

PACKING SPECIFICATION – TAPE AND REEL (mm)

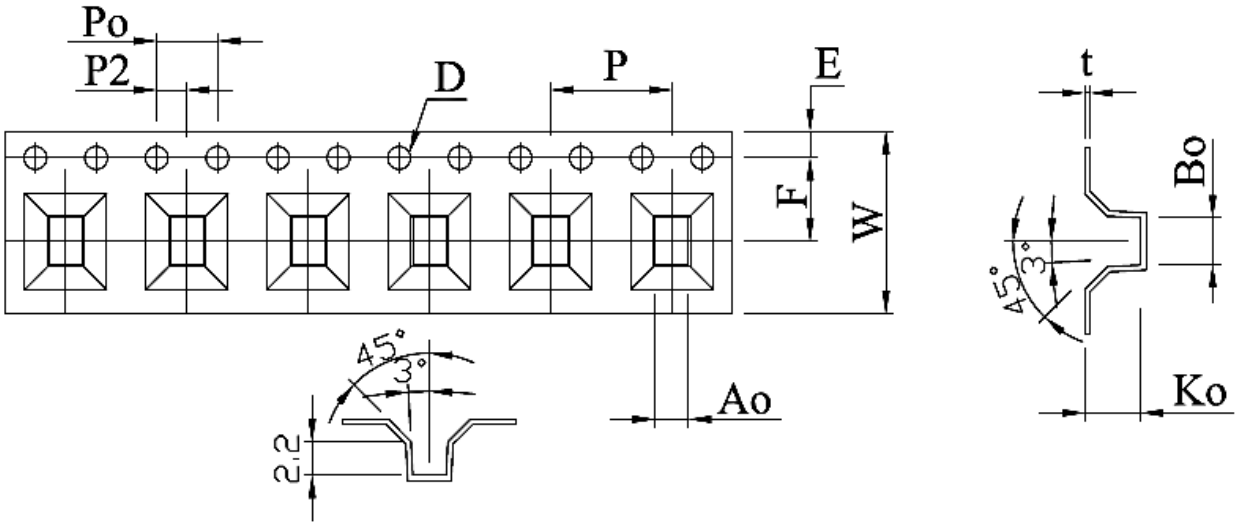

	W	A_0	B_0	K_0	P	F	E	D	P_0	P_2	T
	12,00	2,20	3,10	3,70	8,00	5,50	1,75	Ø 1,50	4,00	2,00	0,35
Tolerance	± 0,30	± 0,10	± 0,10	± 0,10	± 0,10	± 0,05	± 0,10	+ 0,10 - 0,00	± 0,10	± 0,05	± 0,05

- 10 sprocket hole pitch cumulative tolerance ± 0,20 mm.
- Carrier camber not to exceed 1 mm in 250 mm.
- A0 and B0 measured on a plane 0,3 mm above the bottom of the pocket.
- K0 measured from a plane on the inside bottom of the pocket to the top surface of the carrier.
- All dimensions meet EIA-481-B requirements.
- Material: Clear non anti-static polystyrene.
- Component load per 13'' reel: 2.000 pcs (before 20 after 50 pcs).

Modifications and errors excepted. The information and statements herein are believed to be reliable but are not to be construed as a warranty or representation for which we assume legal responsibility. Users should undertake sufficient verifications and testings to determine the suitability for their own particular purpose of any information or products referred to herein.